UNIVERSITÀ DEGLI STUDI FIRENZE

FLORE
Repository istituzionale dell'Università degli Studi di Firenze

Local deformation reactivity of panel paintings in an environment with random microclimate variations: the Maltese Maestro Alberto's

Questa è la Versione finale referata (Post print/Accepted manuscript) della seguente pubblicazione:

Original Citation:

Local deformation reactivity of panel paintings in an environment with random microclimate variations: the Maltese Maestro Alberto's Nativity case-study / P. Dionisi Vici; M. Formosa; J. Schiro; L. Uzielli. - STAMPA. - (2010), pp. 180-185. (COST IE0601 International Conference on Wood Science for Conservation of Cultural Heritage, Braga, 2008 Braga (Portogallo) 5-7 novembre 2008).

Availability:

The webpage https://hdl.handle.net/2158/408923 of the repository was last updated on

Terms of use:

Open Access

La pubblicazione è resa disponibile sotto le norme e i termini della licenza di deposito, secondo quanto stabilito dalla Policy per l'accesso aperto dell'Università degli Studi di Firenze (https://www.sba.unifi.it/upload/policy-oa-2016-1.pdf)

Publisher copyright claim:

La data sopra indicata si riferisce all'ultimo aggiornamento della scheda del Repository FloRe - The above-mentioned date refers to the last update of the record in the Institutional Repository FloRe

(Article begins on next page)

02 May 2026

Paolo DIONISI-VICI, Michael FORMOSA, Joseph SCHIRO, Luca UZIELLI, 2010 – ***Local deformation reactivity of panel paintings in an environment with random microclimate variations: the Maltese Maestro Alberto's Nativity case-study.*** In: Joseph Gril (Editor) Wood Science for Conservation of Cultural Heritage, Braga 2008: Proceedings of the International Conference held by COST Action IE0601 (Braga - Portugal, 5-7 November 2008) – FUP, Firenze University Press, Firenze, 2010, pag. 180:185. ISBN 978-88-6453-157-1 (print) ISBN 978-88-6453-165-6 (online)

LOCAL DEFORMATION REACTIVITY OF PANEL PAINTINGS IN AN ENVIRONMENT WITH RANDOM MICROCLIMATE VARIATIONS: THE MALTESE MAESTRO ALBERTO'S *NATIVITY* CASE-STUDY

Paolo Dionisi-Vici[1], Michael Formosa[2], J Schiro[2], Luca Uzielli[3]*

[1]IVALSA-CNR, San Michele all'Adige – I
[2]Heritage Malta, Kalkara – MT
[3]DISTAF-UNIFI, Firenze – I

Abstract

An experience of deformation analysis on a panel painting under uncontrolled exhibiting conditions is here described. The measurement session has been carried out during an STSM in the frame of the COST-IE0601 Action. The measurements were made using two Deformometric Kits, apparatuses that were developed in DISTAF during the last ten years. They allow to obtain useful information about in-plane and out-of-plane variations of wooden objects undergoing microclimatic variations. The two Kits were applied parallel in different parts of a single board panel painting under restoration, in order to evaluate its *reactivity* to the microclimate variations. The measurement evidenced that the painting reacts with significant differences in the different areas. The data were normalized in order to make them comparable. Some analytical tools have been discussed and applied to the data in order to focus on the short term variations.

1. Introduction

In this paper, the first experimental results of an STSM performed in Malta are discussed. The analysis of deformative response of a panel painting to microclimate variations, in its exhibiting environment, are shown in order to analyse its complex response, influenced both by the time-dependent parameters, like moisture diffusion, hysteresis and mechano-sorption, and by the mechanical characteristics, like anisotropy and local defects effect.

The concepts of PEMC (Potential Equilibrium Moisture Content) and of *reactivity* as the rate of response of a wooden object to the microclimatic variation are briefly introduced.

The attended results of this analysis will become the basis for choices regarding the need of active or passive climate control aiming to improve the conservation of the painting.

The STSM has been performed during the month of June 2008 and the system is now applied and working on a painting in the Heritage Malta laboratories.

2. Materials and methods

The artefact that has been analysed during the STSM and currently under monitoring is a painting undergoing restoration at the laboratories of Heritage Malta, Kalkara, near Valletta. It is a *tempera* painted plank of a minor artist of the XVI century, Maestro Alberto, representing a religious subject, the *Nativity*, normally exhibited in the Museum of Fine Arts in Valletta (Fig. 1).

Fig. 1: the Maestro Alberto painting, with the red circles showing the most damaged parts.

* dionisivici@ivalsa.cnr.it

Joseph Gril (edited by), *Wood Science for Conservation of Cultural Heritage –Braga 2008: Proceedings of the International Conference held by COST Action IE0601 (Braga - Portugal, 5-7 November 2008*, ISBN 978-88-6453-157-1 (print) ISBN 978-88-6453-165-6 (online) © 2010 Firenze University Press

The painting has many painted layer's stability problems, indicated in red circles in the figure, probably depending on the reactivity of the wooden support to the microclimate variations.

The object is normally exhibited in an uncontrolled environment, where no climate logging system is installed. The reports on the microclimatic conditions are based on synthetic and subjective descriptions needing to be more objectively represented.

The mechanical structure of the painting is very simple, the support is constituted of one single poplar board, horizontally oriented and with the following approximate dimensions:

- length: 1580 mm;
- width: 320 mm;
- thickness: ~24 mm.

It has no stiffening elements, like cross-beams or timberframe, and this makes the deformation data we obtained easier to be interpreted, because of no interactions with external structures.

During the restoration period the painting was placed in the laboratories of Heritage Malta, in Qalqara, and it stood on an easel on the middle of its length (Fig. 2).

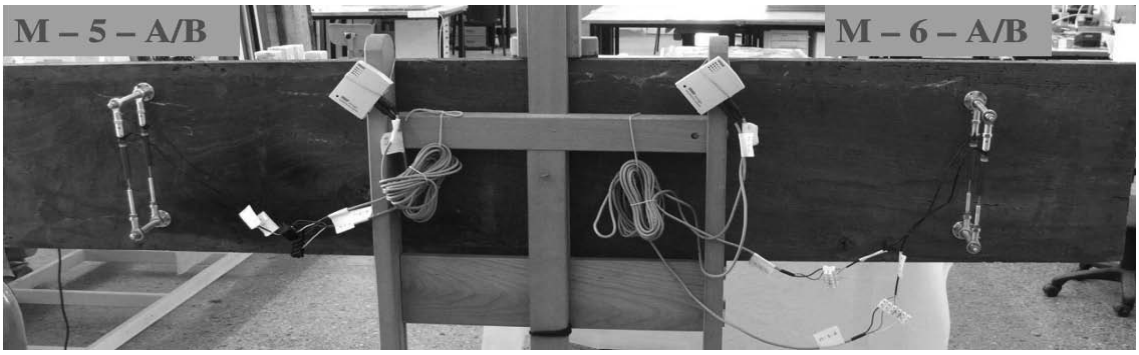

Fig. 2: the two Deformometric Kits applied on the back of the painting, in correspondence to the damaged areas.

Description of the Deformometric kit (DK)

The measurement system adopted for the monitoring is called Deformometric Kit and it has been developed during some years at the DISTAF at the University of Florence.

The benefits of this system are primarily:

- the low impact on the paintings, usually welcome by the restorers and the conservators of the artifacts;
- the high sensitivity to the dimensional variations;
- the quality of in-plane and out-of-plane variations data it can describe, through combined linear deformations, thanks to the geometry of the system.

In order to evaluate the amount of the reactivity, the monitoring system applied on the painting can give direct local information but, after a geometric and statistical elaboration, it is possible to obtain more general and comparable data.

The system, as already described in previous papers [1,2], is based on two parallel transducers joined by means of rod end bearings (bronze-steel in order to make the rotation friction negligible) to two rods connected with wood screws perpendicularly to the back surface of a wooden panel (Fig. 3); because of the wood cupping deformation, while the two vertical elements remain perpendicular to the local surface, their axes form a variable angle with an infinite radius in case the surface is flat; the radius becomes shorter (and, as a consequence, the included angle gets wider) according to the increase of cupping.

The distance between the two elements is measured and logged by the transducers connected to a data-logging system that, in the DK most advanced configuration, is able to power the sensors and to record the signal they output proportionally to their core length.

The DK is at any rate very flexible in its measuring possibility, allowing to adapt it to different measurement needs [2].

In order to simplify the elaboration the measured raw data by the persons involved in the conservation of the object, a synthetic spreadsheet to be filled with the raw data, allows to obtain different geometric parameters:

- the *base distance* between the connections of the DK to the panel (*l*);
- the *cupping angle* of the panel (*β*);
- the *deflection* of the panel (*f*).

It has been elaborated as a *technical annex* of the system and it can be used after specifying the initial parameters adopted for the positioning of the DK:

- the total length of each system "transducer-connections" when the core is completely inside the transducers;
- the distance of the lower transducer from the back surface of the painting and the distance between the transducers;
- the calibration parameters of each transducer, necessary to convert the Volt values, recorded by the logger, in absolute distances corresponding to the core length.

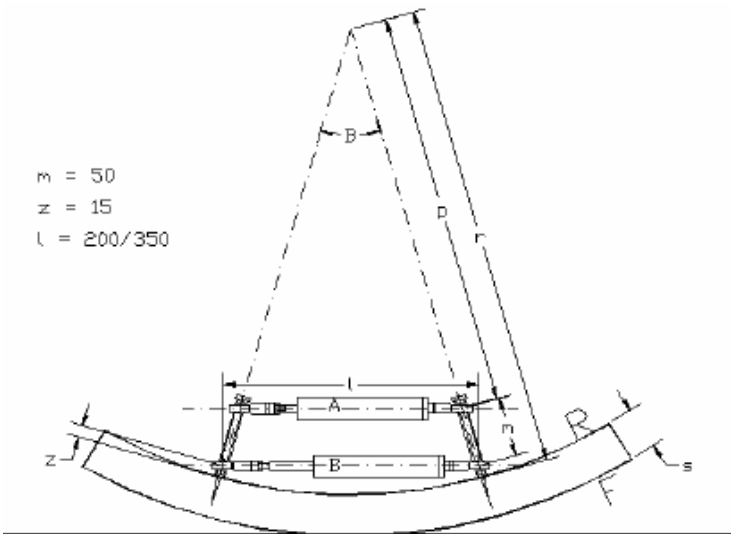

Fig. 3: geometric configuration of the Deformometric Kit for cupping analysis.

Installation of the system

Due to the previously described simple mechanical structure of the painting, we considered interesting the analysis of the behaviour of the plank in different parts of its length, reasonably influenced by local irregularities of its physical structure. It was so decided to install two parallel systems placed in a similar way (almost the same distance between the transducers, according to the local structural differences) in different parts close to the more damaged areas (Fig. 1) along the length of the plank (Fig. 2).

Data analysis criteria

The period examined in this paper is limited to ten days, randomly chosen, between 02/09 and 13/09/2008.

In Fig. 4 it has been chosen to aggregate the Temperature and Relative Humidity in one single value, called Potential Equilibrium Moisture Content (PEMC),obtained using the Hailwood-Horrobin model[3]. It doesn't represent the actual value of wood moisture but the value to which wood would tend to equilibrate in the stable conditions of the given T and RH; it has both the practical utility to be synthetic and to be easily relatable to the mechanical reactivity of the measured objects. The analysed period are evidenced in yellow.

Even though in the restoration laboratories of Kalkara the RH and T are not controlled, the EMC values are in general far from high extreme values (*e.g.* dangerous for possible fungal attacks, over the 20% EMC threshold), despite the *traditional* opinion of Malta as a very humid region.

After the elaboration of the experimental data, it was chosen to display them in two different ways:

- in the first one (Fig. 5) the deformation data are shown as a function of the PEMC variation; in order to compare the different responses deriving from different starting base distances of the two DKs, the variations have been normalized and expressed as a percentage of the initial base distance;
- in the second one (Fig. 6) the short-term *reactivity* of the two systems is displayed in parallel to the PEMC variation curve; also in this case the data have been normalized and expressed as a percentage, divided by the chosen sensitivity parameter Δ_t, as displayed in the secondary Y axis.

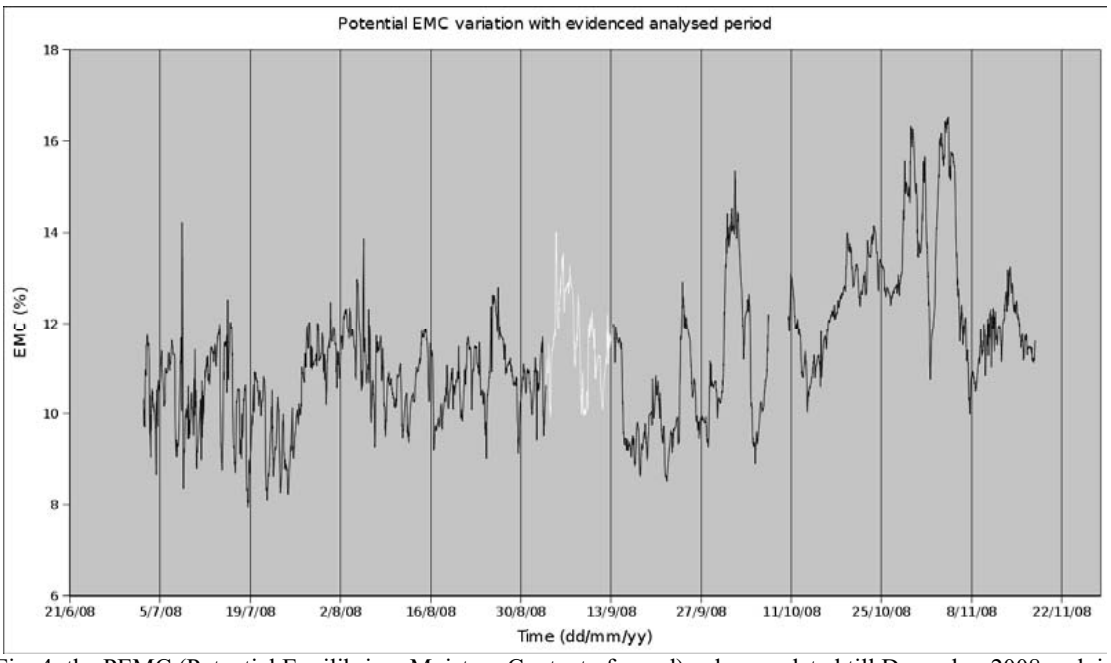

Fig. 4: the PEMC (Potential Equilibrium Moisture Content of wood) values updated till December 2008 and, in yellow, the period specifically analysed in this paper (02/09/2008-13/09/2008).

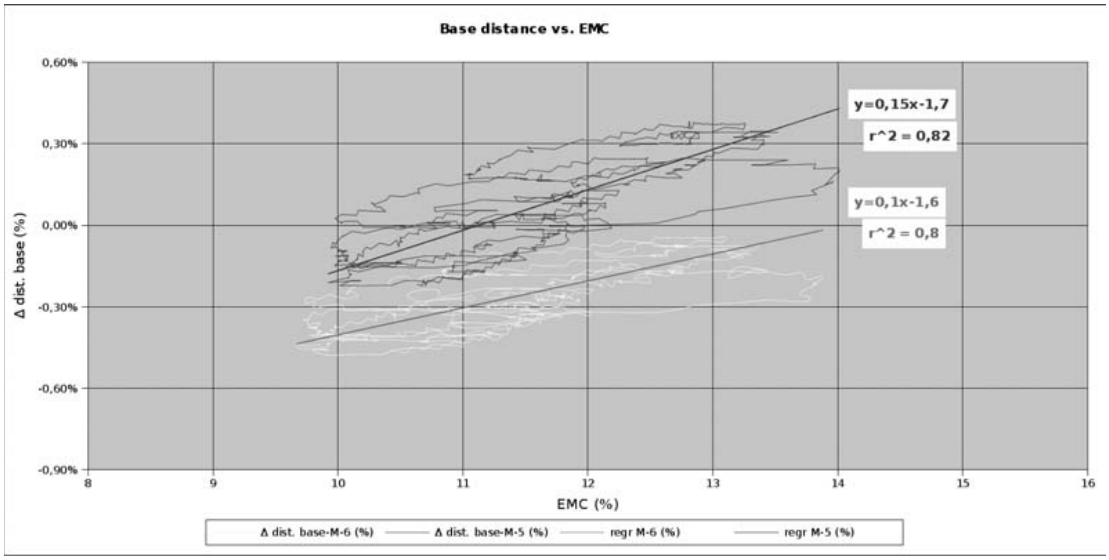

Fig. 5: The comparison beween the normalized variation of the base distance (expressed in percentage) of the two systems as a function of the PEMC variation during the analysed period; the linear regressions of the two populations are displayed with the r^2 index.

This approach is proposed as a way to compare the specific sensitivity of a particular object to the variations with other reference testing setups, like mock-panels with an extreme permeability asymmetry on the faces, as in a previous DISTAF experience [5]. In the two different graphs the geometrical parameter shown, according to the following relation, is the *base distance*, (in Fig. 2 indicated as *l*) intended as the distance between the contact points of the two DK's vertical elements with the panel. This parameter has been arbitrarily chosen and in its place other geometrical parameters could be chosen, like the cupping angle (*β*) or the deflection (*f*).

The mathematical expression of this approach is described in the following two formulas; the quasi-instantaneous reactivity of the panel is expressed by equation (1):

$$\frac{100 \cdot \dfrac{mm_{t_x} - mm_{t_{x-\Delta_t}}}{mm_{t_0}}}{\Delta_t} \tag{1}$$

and the quasi-instantaneous variation of the PEMC is expressed by equation (2):

$$\frac{PEMC_{t_x} - PEMC_{t_{x-\Delta_t}}}{\Delta_t} \tag{2}$$

for Δ_t = 6 hours.

The 6 hours time average window range has been chosen as a reasonable compromise between the need of smoothening both the signals (deformation and PEMC) and the need to correlate the response delay of wooden objects to “readable” PEMC variations that were adopted previously [4], but this can be changed according to specific needs.

This visualization describes in a synthetic way the reactivity of the support.

It is important to underline that the wide variation from the linear interpolating regression in the first graph is due to the presence of the humidity gradients in the thickness of the plank that influence very much the time of equilibration of the whole board. Considering the random variation of the microclimate, the board will never describe a closed path because, in front of a new variation, the distribution of moisture in the thickness will induce a different path from the previous one.

As already described in some past studies [5], it is also important to consider the presence of the *flying wood* effect in the resulting induced deformation; this phenomenon is caused by the physical moisture exchange asymmetry, that has a great importance in panel paintings because of the different permeability of the painted layer and of the back surface, usually untreated.

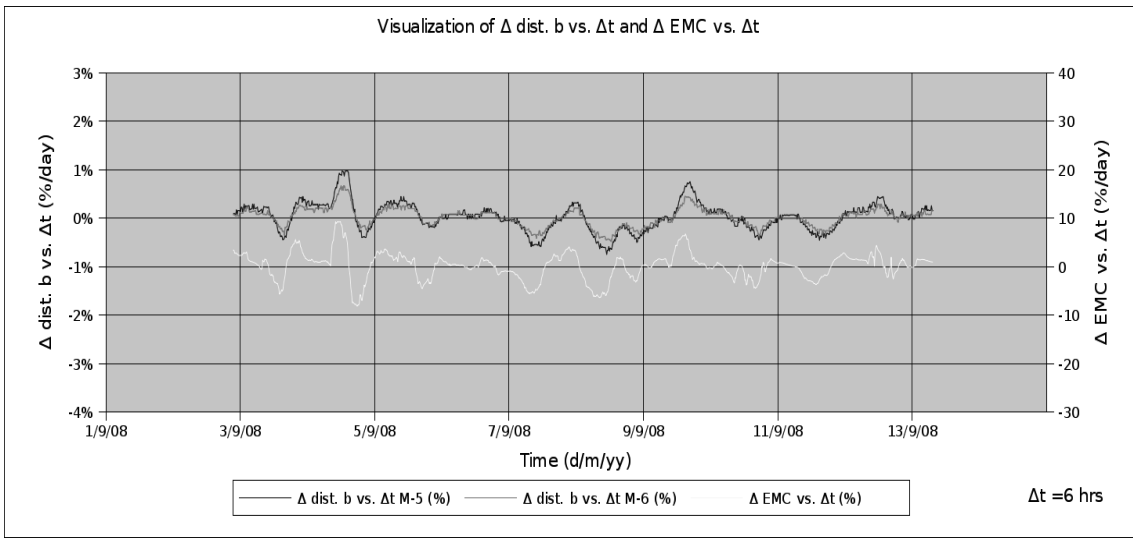

Fig. 6: the comparison between the different reactivities of the two systems applied on *Maestro Alberto* painting compared with the quasi-instantaneous variation of the PEMC.

3. Conclusions

The results obtained during this STSM can be collected in two groups: specific and general results.

Specific results:

- a quantitative description of the reactivity of the painting to microclimatic variations;
- the analysis of the eventual different deformation of different parts of the painting.

General results:

- the widening of the case studies database, with the aim of considering WCHOs singular entities, to be analyzed with general procedures taking care of their specific reactivity.
- a previously DISTAF implemented visual diagnosis form, to be used in the first phase of analysis, in order to have a standard technological description of the object, was used. The form is at a draft stage, but it has to be considered as a tool of the same importance of the measurement apparatuses.

The experimental results deriving from the analysis of a short period of data show quite clearly the following points of interest:

- the sensitivity of the object to the variations is quite evident, but there are no elements, at this analysis stage, that show if they can be considered harmful for the object;
- the reaction of the two systems placed in different parts of the plank is coherent with the general behaviour but different in the amount. This difference, to be investigated more deeply, can induce on the painted surface non homogeneous local compression and tension stresses during the microclimatic variations.

Acknowledgments

The described case-study has been made possible thanks to the COST STSM funding financed by the EU.

Bibliography

1. Uzielli L., Fioravanti M., Casazza O., Perucca G., A technique for double-sided monitoring the deformations of the wooden supports of panel paintings: the experience of Giotto's "Maestà di Ognissanti" - Proc. 3rd Intern. Conference "ART '92", Viterbo, ed. BetaGamma, Vol. 1, 500-514, 1992
2. Dionisi-Vici P., Colmars J., Uzielli L., Instrumentations pour le monitorage des panneaux peints en bois, Technè, 29, C2RMF, Paris, 2009
3. Hailwood, A.J.; Horrobin, S., Absorption of water by polymers: Analysis in terms of a simple model. *Trans. Faraday Soc*. 42B:84-102, 1946
4. Dionisi-Vici P., De Vincenzi M., Uzielli L., An analytical method for the characterization of microclimates for the conservation of wooden Cultural Heritage objects, Art 2005, 8th International Conference on “Non-Destructive Testing and Microanalysis for the Diagnostics and Conservation of the Cultural and Environmental Heritage”, Lecce, 2005
5. Dionisi-Vici P., Mazzanti P., Uzielli L., Mechanical response of wooden boards subjected to humidity step variations: climatic chamber measurements and fitted mathematical models, Journal of Cultural Heritage, Roma, 2006