4.2.3

Wavelength Division Multiplexing in Fail-Safe Nodes

G. Castellini[1], M. Brenci[1], L. Pierucci[1], E. Del Re[2], R. Fantacci[2], N. Marsella[2]
[1]IROE-CNR Firenze, I, [2]DIE Univ. di Firenze, I

Summary

A local area network with fail-safe nodes making use of a wavelength division multiplexing technique (WDM) is described. Such a technique permits bypassing possible non-active nodes, maintaining continuity in case of failure.

The behaviour of the network is evaluated by considering different working conditions. Two solutions are proposed and compared.

1. Introduction

In recent years, many different architectures for Local Area Networks, have emerged. Among these, active loop configurations, in which signal regeneration in every node is performed, present many advantages. However all the nodes must necessarily be operational. This fact gives rise to problems of reliability, which can be overcome by using redundant configurations, making use of optical switches or of bypass topologies.

The present paper proposes and analyzes an active ring fiber-optic network which uses alternative schemes of fail-safe nodes, in which a wavelength division multiplexing technique (WDM) is used to permit bypassing of the non-active nodes.

An expected reduction in the prices of fiber-optic components in the near future (due in particular to developments in plastic-fiber techniques) will make such architectures attractive for automotive applications and other LAN applications, in which both low cost and reliability are important.

Two main configurations are proposed: the first one makes use of nodes with two (or more) transmitters and only one receiver; the second one makes use of nodes with two (or more) receivers and only one transmitter.

The results of a computation, carried out in order to determine the efficiency of the two proposed solutions, are presented by considering different working conditions of the network (i.e. all the nodes are safe, one of the nodes fails, two non-adjacent nodes fail, etc.).

2. System description

The first configuration proposed is represented in Fig. 1a , where, for the sake of simplicity, only a four-nodes scheme is shown. Each node of this configuration makes use of one receiver, and of two transmitters. One of these transmitters is the main one, that is it transmits when the downstream node is working correctly; the other one, which emits on a different wavelength, is the auxiliary, and transmits when the downstream node is inactive. Furthermore (referring to Fig. 1a), the main transmitters of both nodes 1 and 3 emit on the λ_1 wavelength; the main transmitters of both nodes 2 and 4 emit on the λ_2 wavelength.

The opposite condition is true when considering the auxiliary transmitters. As for the receivers, each one is tuned to the wavelength of the main transmitter of the upstream node.

In normal working conditions (all the nodes are on), all the main transmitters are on, and all the auxiliary transmitters are off. In this way, no node is by-passed.

On the contrary, in case of failure of a node, the upstream node is informed of said failure through the ring. Consequently, it switches from the main to the auxiliary transmitter, thus permitting the communication to by-pass the downstream inactive node. Such a by-pass is made possible by one passive coupler and by two wavelength division multi-demultiplexers (WDM), as shown in Fig. 1a .

The second configuration (in the simple case of four stations) is shown in Fig. 1b. It makes use of only one transmitter and two receivers. Like the previous configuration, two different wavelengths (λ_1 and λ_2) are used, and the λ_1 transmitters alternate with the λ_2 one. Differently from the previous configuration, there are no changes in the upstream transmitter wavelength in case one node fails. An increase in emitted power can be operated, however, in order to face the additional attenuation due to the by-passing of the downstream station.

3. Design criteria

3.1 Two-transmitter configuration

We assume the network to be composed of a number of similar stations. Considering a single station (Fig. 2a), we can define:

P_{mt} , P_{at} = power of the main and auxiliary source, respectively;

P_{mr} , P_{ar} = input power at the receiver when upstream, main and auxiliary transmitters, respectively, are on;

Papers presented at EFOC/LAN 90, the Eighth Annual European Fibre Optic Communications and Local Area Networks Conference, held June 27–29, 1990 at the Park Hilton, Munich, Federal Republic of Germany. Sponsored by IGI Europe Inc., a Division of Information Gatekeepers, Inc., 214 Harvard Avenue, Boston, MA 02134 USA. Telephone (617) 232-3111; Telex 499-6068 fiber; Fax (617) 734-8562.

c_1 , c_2 = coupling ratios of the coupler; where: $c_1 + c_2 = 1$

a = excess loss of the passive coupler (dB);

b = loss of each connector (dB);

d , e = excess losses and crosstalk of the multi-demultiplexers (dB), respectively;

g = fiber attenuation (dB);

$$T = P_{mt}/P_{at} \quad (1)$$

$$R = P_{mr}/P_{ar} \quad (2)$$

The set of curves drawn in Fig. 3, which shows the behaviour of the coupling ratio c_1 as a function of T with R constant, are derived from the following:

$$P_{mr} = c_2 P_{mt} 10^{-\frac{a+8b+2d+g}{10}}$$

$$P_{ar} = c_1 P_{at} 10^{-\frac{a+14b+4d+2g}{10}}$$

from which, taking account of (1) and (2), is obtained:

$$c_1 = \frac{1}{1+\frac{R}{T}10^{-\frac{6b+2d+g}{10}}}$$

The previous evaluation can be obtained without knowing if one or more nodes are off or on. On the contrary, to calculate other characteristic parameters, such the received power normalized to the main transmitted power (P_r/P_{mt}) or the signal-to-noise ratio (P_r/N_r), we have to distinguish several working conditions of the network. Let us to denote as "block" the union of a node with the downstream fiber (see Figs. 2). Expressing the output parameters of each block as a function of the output and status parameters, we have to distinguish between three fundamental cases:

- Node safe and downstream node safe
- Node safe and downstream node fails
- Node fails and downstream node safe

Considering a single block, we can define:

P_{mo} , P_{ao} = output power at the same wavelength of the main and auxiliary source, respectively;

N_{mo} , N_{ao} = output noise power at the same wavelength of the main and auxiliary source, respectively;

P_{mi} , P_{ai} = input power at the same wavelength of the upstream node of the main and auxiliary source, respectively;

N_{mi} , N_{ai} = input noise power at the same wavelength of the upstream node of the main and auxiliary source, respectively;

Now we can express the output powers as a function of the input power for each block.

3.1.1 Node safe and downstream node safe

$$\frac{P_{mo}}{P_{mt}} = c_2 10^{-\frac{a+5b+d+g}{10}}$$

$$\frac{P_{ao}}{P_{mt}} = 0$$

$$\frac{N_{mo}}{P_{mt}} = \frac{N_{ai}}{P_{mt}} c_1 10^{-\frac{a+8b+2d+g}{10}}$$

$$\frac{N_{ao}}{P_{mt}} = \frac{N_{mi}+P_{mi}}{P_{mt}} c_1 10^{-\frac{a+8b+d+g+e}{10}}$$

In this case the main source is transmitting.

3.1.2 Node safe and downstream node fails

$$\frac{P_{mo}}{P_{mt}} = 0$$

$$\frac{P_{ao}}{P_{mt}} = \frac{1}{T} 10^{-\frac{3b+d+g}{10}}$$

$$\frac{N_{mo}}{P_{mt}} = \frac{N_{ai}}{P_{mt}} c_1 10^{-\frac{a+8b+2d+g}{10}}$$

$$\frac{N_{ao}}{P_{mt}} = \frac{N_{mi}+P_{mi}}{P_{mt}} c_1 10^{-\frac{a+8b+d+g+e}{10}}$$

In this case the auxiliary one is transmitting.

3.1.3 Node fails and downstream node safe

$$\frac{P_{mo}}{P_{mt}} = \frac{P_{ai}}{P_{mt}} c_1 10^{-\frac{a+8b+2d+g}{10}}$$

$$\frac{P_{ao}}{P_{mt}}=0$$

$$\frac{N_{mo}}{P_{mt}}=\frac{N_{ai}}{P_{mt}}c_1 10^{-\frac{a+8b+2d+g}{10}}$$

$$\frac{N_{ao}}{P_{mt}}=\frac{N_{mi}}{P_{mt}}c_1 10^{-\frac{a+8b+d+g+e}{10}}$$

Any source is transmitting, but we can find as output a signal at the same wavelength of the main source.

3.1.4 Performance analysis

Expressing the power at the receiver, as normalized to the main transmitted power (P_r/P_{mt}), and the signal-to-noise ratio (P_r/N_r) as a function of the input parameters of the considered block, it follows:

$$\frac{P_r}{P_{mt}}=10\log\frac{P_{mi}10^{-\frac{3b+d}{10}}}{P_{mt}}$$

$$\frac{P_r}{N_r}=10\log\frac{P_{mi}10^{-\frac{3b+d}{10}}}{N_{mi}10^{-\frac{3b+d}{10}}+N_{ai}10^{-\frac{3b+e}{10}}}$$

Combining the previous fundamental cases, we have to distinguish several working conditions of the network: all the nodes are safe; one of the nodes fails; two non-adjacent nodes fail.

Since a steady state is reached after three nodes, it is also possible to consider a four-node network. In such a case, taking node 4 as reference, the possible arrangements are:

a) all four nodes safe (SSSS arrangement)
b) node 1 fails (FSSS arrangement)
c) node 2 fails (SFSS arrangement)
d) node 3 fails (SSFS arrangement)
e) nodes 1 and 3 fail (FSFS arrangement)

The behaviour of (P_r/P_{mt}) as a function of the T parameter with R constant, is shown in Figs. 4 (a to e), respectively for the aforesaid a-b-c-d-e network situations. Similarly, Figs. 5 (a to e) show the behaviour of the signal-to-noise ratio at the receiver of node 4 .

The above curves suggest some design criteria. In fact, (considering T=1, i.e. same power of the main and auxiliary transmitter, respectively) a R=1 choice would impose same received power in both cases: all nodes safe and one node failed. That is, the network seems to be insensitive to node failure. However, in this case, a correspondingly low power efficiency (P_r/P_{mt}<-20dB from Figs. 4), results. In fact, c_1 must be high (Fig. 3), and c_2 low.

To overcome this problem we can increase the auxiliary transmitted power (e.g. T=0.1). As a consequence, also an increase in the signal-to-noise ratio results (Figs. 5).

However, it can be more convenient to operate a compromise: e.g. T=0.5 ; R=2; c_1=0.6. In this way, acceptable conditions result .

3.2 Two-receiver configuration

The outline of a single station is shown in detail in Fig. 2b. In this a configuration we can define:

P_{mt} , P'_{mt} = transmitter power when the downstream node is active and non-active respectively.

P_{mr} , P_{ar} = input power at the main and auxiliary receivers respectively.

a , b , d , e , g , c_1 , c_2 are the same of the "two-transmitter configuration".

$T = P_{mt}/P'_{mt}$; $R = P_{mr}/P_{ar}$

As in the previous analysis, it is possible to calculate the behaviour of the coupling ratio c_1 as a function of T with R constant. However, this behaviour is the same as that of the "two-transmitter configuration", shown in Fig. 3 . Furthermore, to calculate both the power efficiency (received power P_r, normalized to the main transmitted power P_{mt}) and the signal-to-noise ratio (P_r/N_r), we may, also in this case, distinguish the same "two-transmitter configuration" three fundamental cases.

3.2.1 Node safe and downstream node safe

$$\frac{P_{mo}}{P_{mt}}=10^{-\frac{3b+d+g}{10}}$$

$$\frac{P_{ao}}{P_{mt}}=0$$

$$\frac{N_{mo}}{P_{mt}}=\frac{N_{mi}}{P_{mt}}c_1 10^{-\frac{a+8b+d+g+e}{10}}$$

$$\frac{N_{ao}}{P_{mt}}=\frac{N_{mi}+P_{mi}}{P_{mt}}c_1 10^{-\frac{a+8b+2d+g}{10}}$$

In this case the only node is transmitting.

3.2.2 Node safe and downstream node fails

$$\frac{P_{mo}}{P_{mt}}=\frac{1}{T}10^{-\frac{3b+d+g}{10}}$$

$$\frac{P_{ao}}{P_{mt}}=0$$

$$\frac{N_{mo}}{P_{mt}} = \frac{N_{ai}}{P_{mt}} c_1 10^{-\frac{a+8b+d+g+e}{10}}$$

$$\frac{N_{ao}}{P_{mt}} = \frac{N_{mi}+P_{mi}}{P_{mt}} c_1 10^{-\frac{a+8b+2d+g}{10}}$$

In this case an increase in emitted power can be operated.

3.2.3 Node fails and downstream node safe

$$\frac{P_{mo}}{P_{mt}} = 0$$

$$\frac{P_{ao}}{P_{mt}} = \frac{P_{mi}}{P_{mt}} c_1 10^{-\frac{a+8b+2d+g}{10}}$$

$$\frac{N_{mo}}{P_{mt}} = \frac{N_{ai}}{P_{mt}} c_1 10^{-\frac{a+8b+d+e+g}{10}}$$

$$\frac{N_{ao}}{P_{mt}} = \frac{N_{mi}}{P_{mt}} c_1 10^{-\frac{a+8b+2d+g}{10}}$$

The source is not transmitting, but we can find as output a signal at the same wavelength of the upstream source.

3.2.4 Performance analysis

We have to distinguish two cases in order to determine (P_r/P_{mt}) and (P_r/N_r) as a function of the input parameters for the considered block:

a) upstream node on

$$\frac{P_r}{P_{mt}} = 10\log\frac{P_{mi}c_2 10^{-\frac{a+5b+d}{10}}}{P_{mt}}$$

$$\frac{P_r}{N_r} = 10\log\frac{P_{mi}c_2 10^{-\frac{a+5b+d}{10}}}{N_{mi}c_2 10^{-\frac{a+5b+d}{10}} + N_{ai}c_2 10^{-\frac{a+5b+e}{10}}}$$

b) upstream node off

$$\frac{P_r}{P_{mt}} = 10\log\frac{P_{ai}10^{-\frac{3b+d}{10}}}{P_{mt}}$$

$$\frac{P_r}{N_r} = 10\log\frac{P_{ai}10^{-\frac{3b+d}{10}}}{N_{ai}10^{-\frac{3b+d}{10}} + N_{mi}10^{-\frac{3b+e}{10}}}$$

Combining the fundamental cases we have to distinguish the same "two-transmitter configuration" conditions of a four-node network: (SSSS), (FSSS), (SFSS), (SSFS), and (FSFS) arrangements.

As in the configuration with two transmitters it is possible to indicate the behaviour of the received power at node 4 (normalized to the transmitting power) as a function of T parameter with R constant. It can be demonstrated that such behaviour is the same as Figs. 4, for each arrangement. On the contrary, the behaviour of the signal-to-noise ratio at the receiver of node 4 is different. It is shown in Figs. 6 (a to e).

4. Conclusions

The behaviour of the two proposed configurations differs only with regard to the signal-to-noise ratio.

A comparison can then be made considering only the curves of Figs. 5 and Figs. 6. These curves show that the signal-to noise is:

- higher for the "two-transmitter configuration", when all four nodes are safe (SSSS arrangement), or node 1 fails (FSSS arrangement);
- higher for the "two-receiver configuration", when node 2 (SFSS arrangement), or node 3 (SSFS arrangement), or node 1 and 3 together (FSFS arrangement), fail.

The FSFS arrangement is the most critical one. We can therefore conclude that, in a number of applications, the "two-receiver configuration" is more convenient than the "two-transmitter configuration".

The same can be concluded on considering reliability of the system. In fact, from this point of view, because one detector is more reliable than one laser diode, the "two-receiver configurations" is consequently more reliable.

References

[1] Floyd E. Ross, "FDDI - tutorial", IEEE Communication Magazine, vol.24, no.5, May 1986

[2] Floyd E. Ross, "Rings are 'round for Good", IEEE Network Magazine, vol.1, no.1, January 1987

[3] Roy C. Dixon, "Lore of the Token Ring", IEEE Network Magazine, vol.1, no.1, January 1987

[4] Daniel Pitt, "Standards for the Token Ring", IEEE Network Magazine, vol.1, no.1, January 1987

Work partially supported by MURST and CNR PROMETHEUS project.

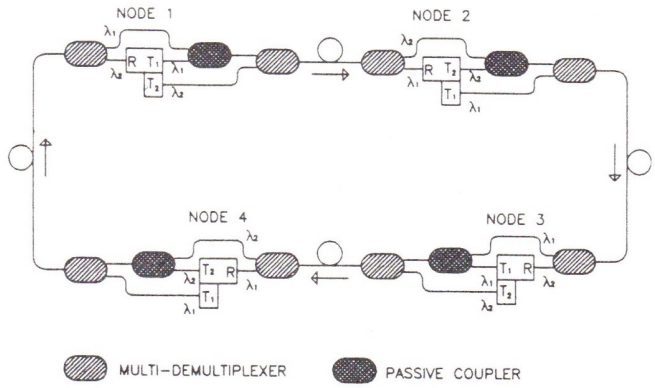

Fig.1a Two-transmitter configuration (TTC).

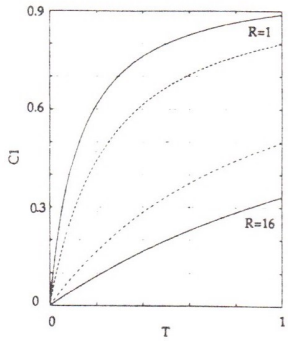

Fig.3 Coupling ratio of the passive coupler vs. T with R constant.

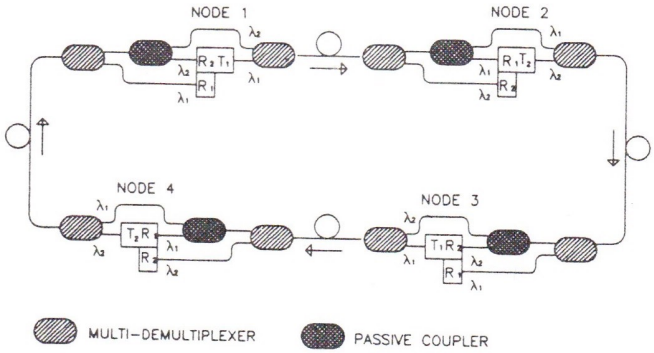

Fig.1b Two-receiver configuration (TRC).

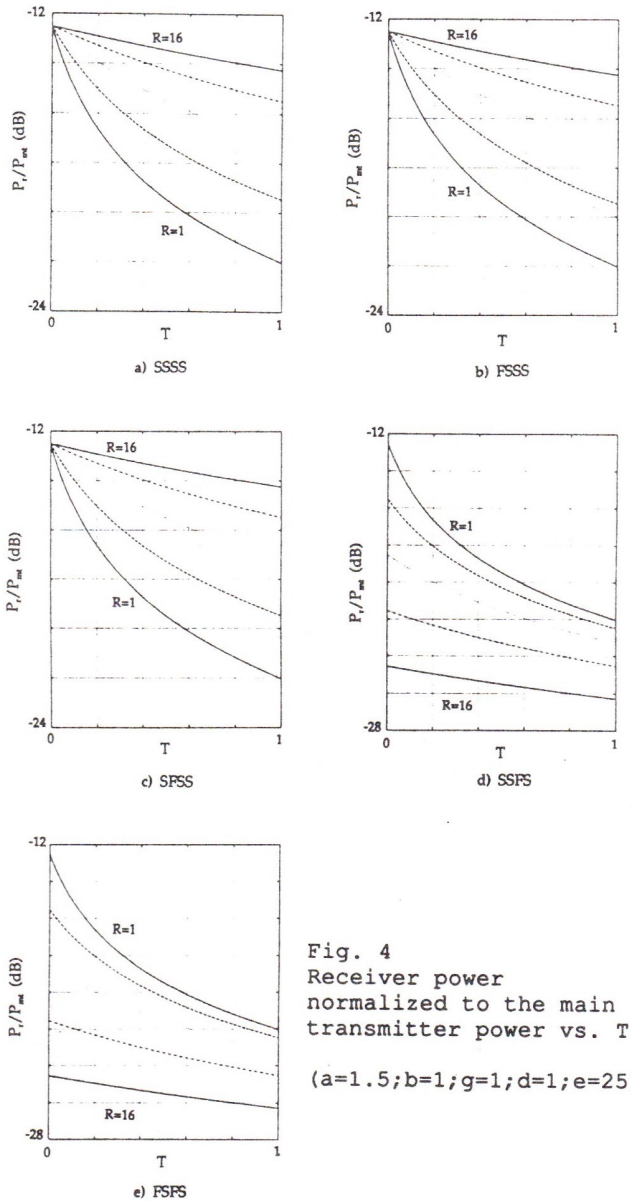

Fig. 4
Receiver power normalized to the main transmitter power vs. T

(a=1.5;b=1;g=1;d=1;e=25)

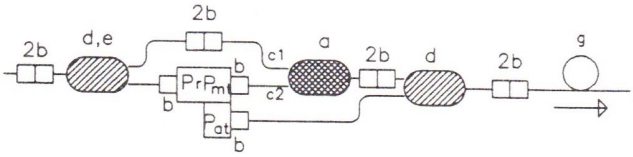

Fig.2a Single node TTC.

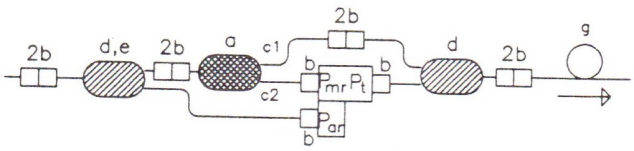

Fig.2b Single node TRC.

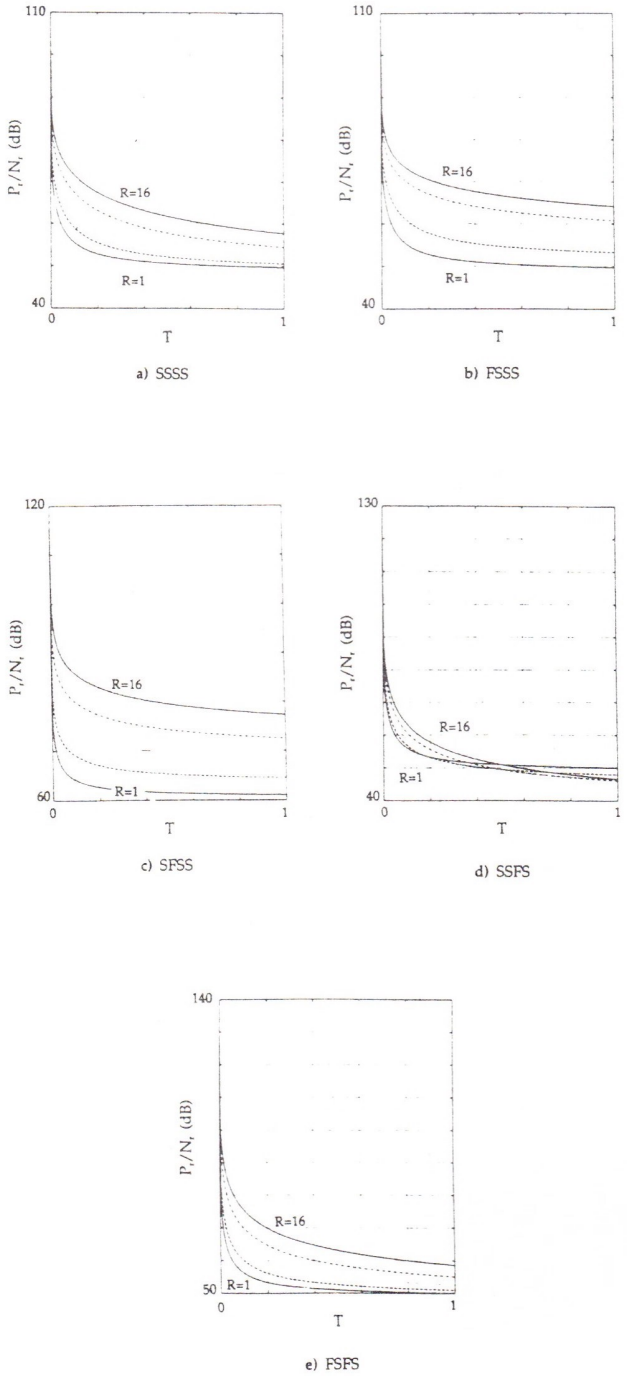

Fig.5 Signal to noise ratio vs.T, referring to the TTC. (a=1.5, b=1, g=1, d=1, e=25)

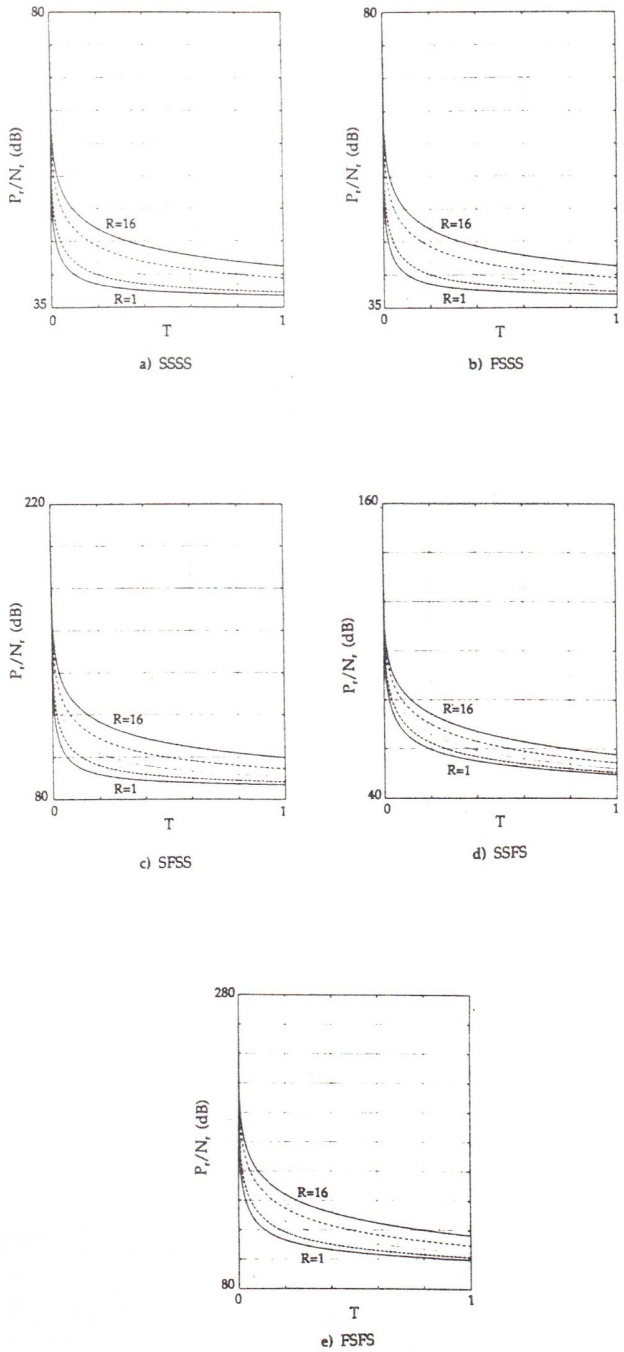

Fig.6 Signal to noise ratio vs.T, referring to the TRC. (a=1.5, b=1, g=1, d=1, e=25)